**Case earth**

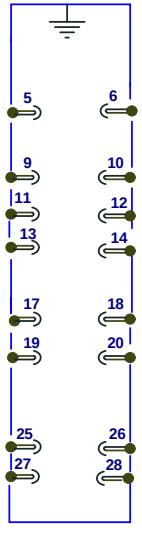


**Module terminal blocks viewed from rear**

**V* : 110 Vdc**

* High Speed lockout Relay
a)5 connect to +110v dc
b)6 connect to -110v dc
c)27 use to trip
d)28 use to reset

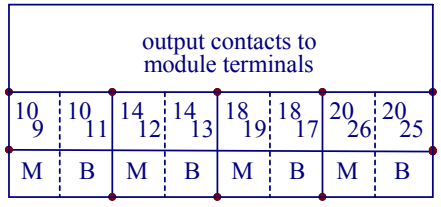


**Contact description**
**M:Make**
**B:Break**

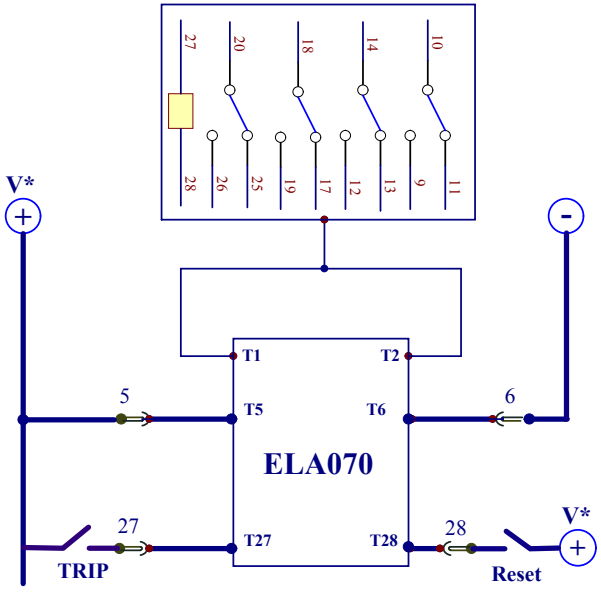


**Viewed from inside**

| | | |
|---|---|---|
| Title | **ELA070** | |
| Size A4 | Number | Revision |
| Date: 2/19/2019 | | Sheet of |
| File: D:\ELA070.Sch | | Drawn By: |